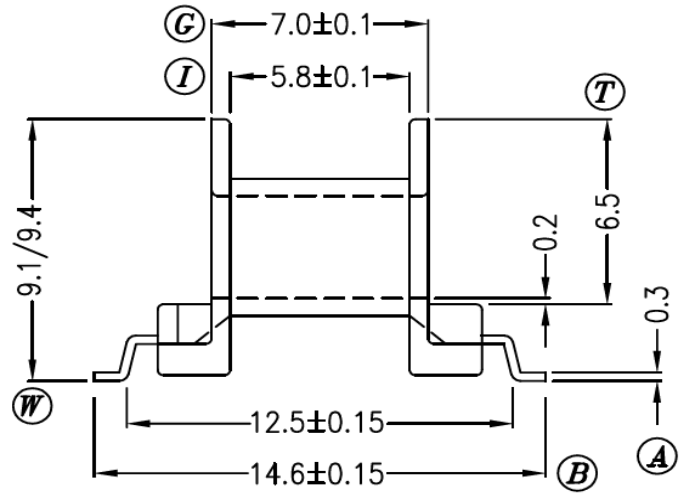

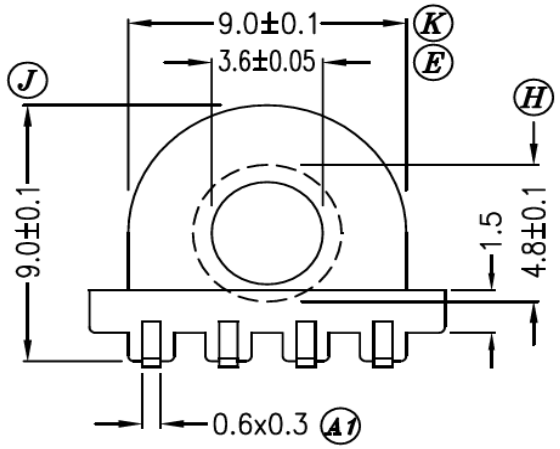

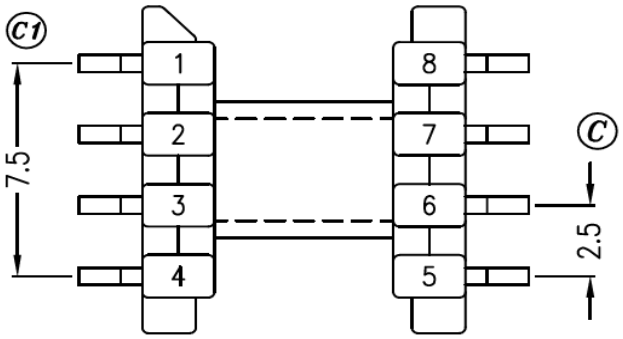

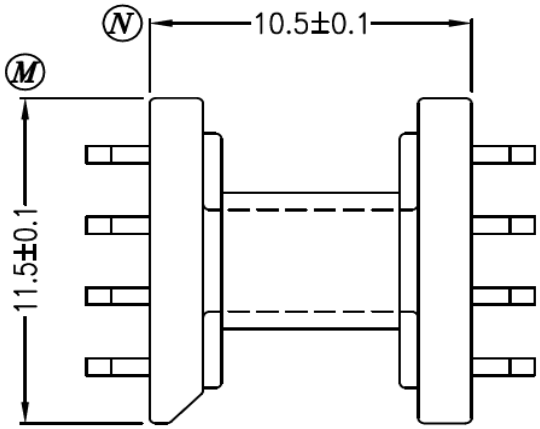

PART NUMBER	MATERIAL
SMD-0022	E4008
SMD-0022-4	PM9630

Components Anchia Intl. LLC

835 W. PRICE ROAD
BROWNSVILLE, TX 78520
TEL: (956) 986-2772
FAX: (956) 986-2882
EMAIL: comancintl@sbcglobal.net

MODEL: SEE ABOVE (EP-10 CORE SIZE)

Material: SEE ABOVE

Pin: PHOSPHOR BRONZE

DATE:	UNIT:	Tolerance:
10/7/2008	m/m	.xxx± 0.08
		.xx± 0.1
		.x± 0.2